FEATURES

- 4" capacitive touch panel (480x480 pixels)
- Available colours, please refer to: https://www.zennio.com/finishes
- Up to 9 free configurable pages and one more for settings
- Built-in temperature, humidity and proximity sensors
- CO_2 measurement with accessory ref. ZACCO2S (sold separatelly)
- KNX Data Secure supported
- Clock functionality (subject to updating through devices with RTC or NTP client)
- 2 independent thermostats
- 4 analog/digital inputs
- Total data saving on KNX bus failure
- Integrated KNX BCU (TP1-256)
- Dimensions 87 x 87 x 33.7 mm
- Flush mount on standard European, Swiss and British mounting box
- Conformity with the CE, RCM directives (marks on the back side)

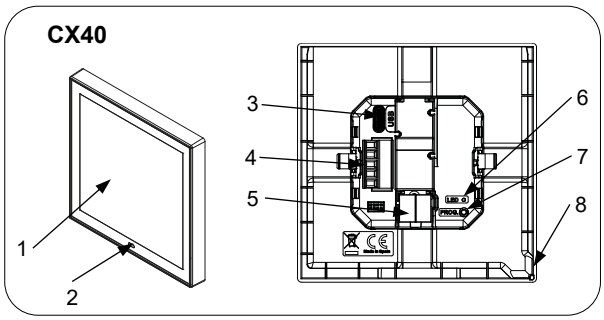

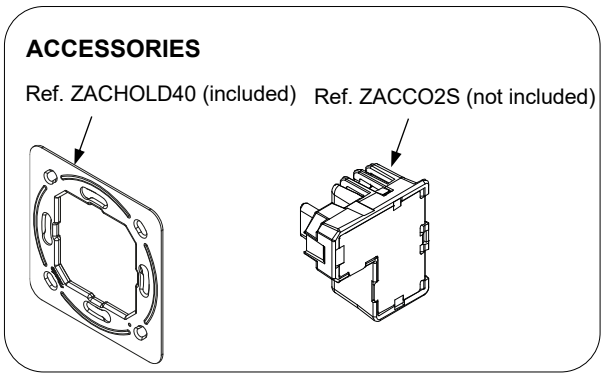

Figure 1: CX40

1. Touch display	2. Proximity sensor	3. USB-C connector	4. Inputs connector
5. KNX connector	6. Programming LED	7. Programming button	8. Temperature and humidity sensor

Programming button: short press to set programming mode. If this button is held while plugging the device into the KNX bus, it enters the safe mode. In order to perform a KNX Secure factory reset, while the device is in safe mode, press the button for 10 seconds until the programming LED changes its state.

Programming LED: programming mode indicator (red). When the device enters the safe mode, it blinks (red) every half second. During the start-up (reset or after KNX bus failure) and if the device is not in safe mode, it emits a red flash.

GENERAL SPECIFICATIONS

CONCEPT			DESCRIPTION	
Type of device			Electric operation control device	
KNX supply	Voltage (typical)		29 VDC SELV	
	Voltage range		21-31 VDC	
	Maximum consumption	Voltage	mA	mW
		29 VDC (typical)	36.9	1070.1
		24 VDC[1]	45	1080
	Connection type		Typical TP1 bus connector for 0.8 mm Ø rigid cable	
External power supply			Not required	
Operation temperature			0 .. +55 °C	
Storage temperature			-20 .. +55 °C	
Operation humidity			5 .. 95%	
Storage humidity			5 .. 95%	
Complementary characteristics			Class B	
Protection class			III	
Operation type			Continuous operation	
Device action type			Type 1	
Electrical stress period			Long	
Degree of protection			IP20, clean environment	
Installation			Flush mount on back box	
Minimum clearances			Not required	
Response on KNX bus failure			Data saving according to parameterization	
Response on KNX bus restart			Data recovery according to parameterization	
Operation indicator			The programming LED indicates programming mode (red). Display allows visual functionality feedback.	
Weight			103 g	
Housing material / Ball pressure test temperature			PC+ABS FR V0 halogen free / 75 °C (housing), 125 °C (connectors)	

[1] Maximum consumption in the worst-case scenario (KNX Fan-In model).

INPUTS SPECIFICATIONS AND CONNECTIONS	
CONCEPT	**DESCRIPTION**
Number of inputs	4
Inputs per common	4
Operation voltage	3.3 VDC in the common
Operation current	1 mA @ 3.3 VDC (per input)
Switching type	Dry voltage contacts between input and common
Connection method	Pluggable screw terminal block (0.2 Nm max.)
Cable cross-section	0.5-1,5 mm² (IEC) / 28-16 AWG (UL)
Maximum cable length	30 m
NTC accuracy (@ 25 °C) ²	±0.5 °C
Temperature resolution	0.1 °C
Maximum response time	10 ms

² For Zennio temperature probes.

TEMPERATURE AND HUMIDITY SENSOR SPECIFICATIONS	
CONCEPT	**DESCRIPTION**
Temperature measurement range	-40 .. 90 °C
Temperature resolution / accuracy	0.1 °C / ±0.5 °C (@ 25 °C)
Humidity measurement range	0 .. 100% RH
Humidity response time	1 s
Humidity resolution / accuracy	0.1% / ±5% RH
Humidity drift	±0.25% RH per year in normal air

INPUTS CONNECTION

Any combination of the following accessories is allowed in the inputs:

Temperature Probe*

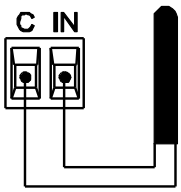

Zennio temperature probe.

Motion Sensor

Up to two motion sensors can be plugged into the same device input (parallel wiring)

Screw terminal for connecting Zennio motion sensors

Switch/Sensor/ Push button

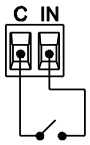

⚠ Commons of different devices must not be connected together.

* Zennio temperature probe or any NTC with known resistance values at three points in the range [-55, 150 ºC].

INSTALLATION INSTRUCTIONS

1. Fix the metal plate into a back box by using the suitable plate and the screws from the box, checking that it is levelled.
2. Connect the KNX bus and the inputs terminal to the back of the device.
3. Fit the device into its final position checking that clips strength is enough to fix the device.

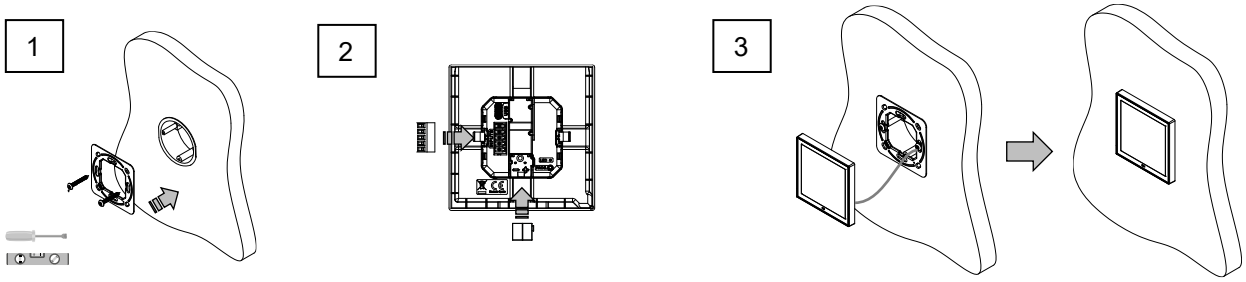

DIMENSIONS (mm)

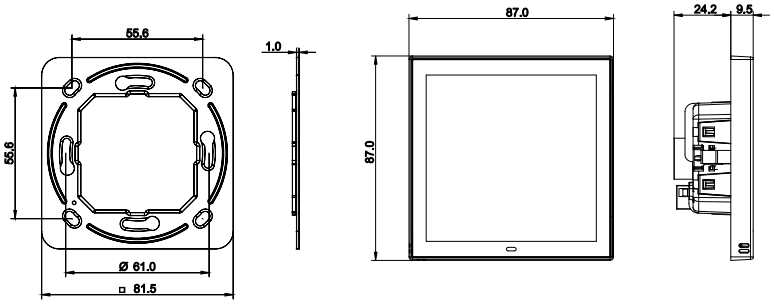

⚠ SAFETY INSTRUCTIONS AND ADDITIONAL NOTES

- Installation should only be performed by qualified professionals according to the laws and regulations applicable in each country.
- Do not connect the mains voltage nor any other external voltage to any point of the KNX bus; it would represent a risk for the entire KNX system. The facility must have enough insulation between the mains (or auxiliary) voltage and the KNX bus or the wires of other accessories, in case of being installed.
- Keep the device away from water (condensation over the device included) and do not cover it with clothes, paper or any other material while in use.
- The WEEE logo means that this device contains electronic parts and it must be properly disposed of by following the instructions at https://www.zennio.com/weee-regulation.
- This device contains software subject to specific licences. For details, please refer to https://zennio.com/licenses.