Zennio

Full Color Capacitive Touch Panel with 10'' Display

ZVIZ100 **TECHNICAL DOCUMENTATION**

FEATURES

- 10" full-color capacitive touch panel (1280x800 pixels)
- Available colours, please refer to: https://www.zennio.com/finishes
- 16 million color LCD display
- Proximity and luminosity sensor
- Loudspeakers for acoustic notifications
- 2 independent thermostats
- Optional features according to the license type (sold separately): Remote control from app, voice control, video intercom and internal calls
- Video intercom / IP camera compatibility: P2P SIP / SIP services; G722/G721/G711u (PCMU) audio codecs; H264 video codec; DTMF (RFC 2833); mjpeg
- 4 analog/digital inputs
- External 24-29 VDC power supply
- Micro-USB connection for firmware update and additional functionalities
- Ethernet connection
- Clock with NTP support
- Total data saving on KNX bus failure
- Integrated KNX BCU (TP1-256)
- Dimensions 248.9 x 174 x 39.2 mm (it protrudes 11.8 mm from the wall)
- Flush mount on double European and double British standard mounting box
- Conformity with the CE, RCM directives (marks on the back side)

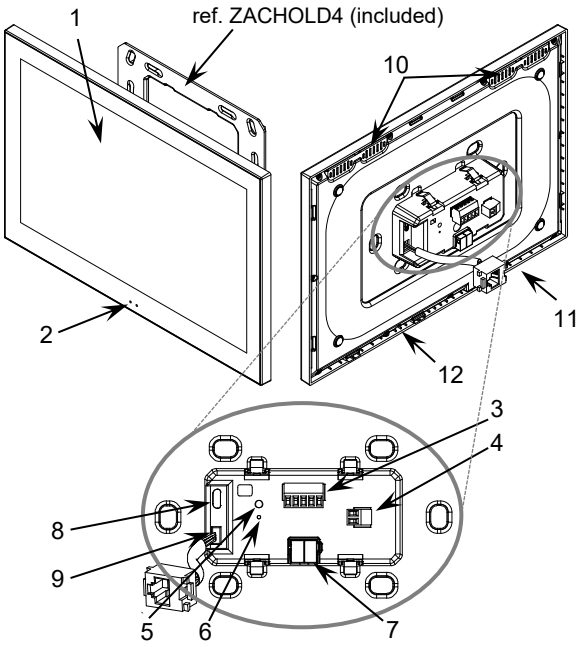

Figure 1: Z100

1. Touch screen	2. Luminosity and proximity sensor	3. Inputs connector	4. Power input	5. Programming button
6. Programming LED	7. KNX connector	8. Micro-USB connector (administrator/service port)	9. Ethernet connector	10. Loudspeakers
11. Microphone	12. Temperature probe (only for internal operation of the device)			

Programming button: short press to set programming mode. If this button is held while plugging the device into the KNX bus, it enters the safe mode.

Programming LED: programming mode indicator (red). When the device enters the safe mode, it blinks (red) every half second. During the start-up (reset or after KNX bus failure) and if the device is not in safe mode, it emits a red flash.

GENERAL SPECIFICATIONS

CONCEPT			DESCRIPTION	
Type of device			Electric operation control device	
KNX supply	Voltage (typical)		29 VDC SELV	
	Voltage range		21-31 VDC	
	Maximum consumption	Voltage	mA	mW
		29 VDC (typical)	5.5	159.5
		24 VDC[1]	10	240
	Connection type		Typical TP1 bus connector for 0.8 mm Ø rigid cable	
External power supply			24-29 VDC. Maximum consumption: 500 mA (24 VDC) - 400 mA (29 VDC). Consumption without video intercom functionality: 300 mA (24 VDC) - 250 mA (29 VDC).	
Operation temperature			5 .. +45 °C	
Storage temperature			-20 .. +55 °C	
Operation humidity			5 .. 95%	
Storage humidity			5 .. 95%	
Complementary characteristics			Class B (residential)	
Protection class			III (100 V)	
Operation type			Continuous operation	
Device action type			Type 1	
Electrical stress period			Long	
Degree of protection			IP20, clean environment	
Installation			With flush-mounted back box and fixing through pressure clips	
Minimum clearances			Not required	
Response on KNX bus failure			Data saving according to parameterization	
Response on KNX bus restart			Data recovery according to parameterization	
Operation indicator			The programming LED indicates programming mode (red). Backlighting of the display depending on the parameterization.	
Weight			693 g	
Housing material			PC+ABS FR V0 halogen free	

[1] Maximum consumption in the worst-case scenario (KNX Fan-In model).

INPUTS SPECIFICATIONS AND CONNECTIONS	
CONCEPT	**DESCRIPTION**
Number of inputs	4
Inputs per common	4
Operation voltage	3.3 VDC in the common ²
Operation current	1 mA @ 3.3 VDC (per input)
Switching type	Dry voltage contacts between input and common
Connection method	Pluggable screw terminal block (0.3 Nm max.)
Cable cross-section	0.2-1 mm² (IEC) / 26-16 AWG (UL)
Maximum cable length	30 m
NTC accuracy (@ 25 °C) ²	±0.5 °C
Temperature resolution	0.1 °C
Maximum response time	10 ms

² For Zennio temperature probes.

INPUTS CONNECTION

Any combination of the following accessories is allowed in the inputs:

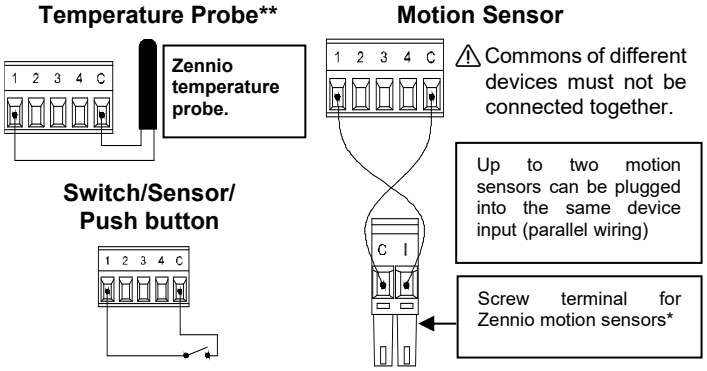

* In case of using ZN1IO-DETEC-P sensor, its micro switch number 2 must be in **Type B position.**

** Zennio temperature probe or any NTC with known resistance values at three points in the range [-55, 150 ºC].

EXTERNAL POWER SUPPLY AND PORTS SPECIFICATIONS AND CONNECTIONS	
CONCEPT	**DESCRIPTION**
Voltage	24-29 VDC
Maximum consumption	500 mA (24 VDC) - 400 mA (29 VDC)
Connection method	Pluggable screw terminal block (0.3 Nm max.)
Cable cross-section	0.2-1 mm² (IEC) / 26-16 AWG (UL)
USB connector	Micro USB Type B connector. Use it only for the functionality specified in the manual. Do not connect neither to PC, hard drives nor other devices whose consumption is over 150 mA. The information about the underlying software licenses can be downloaded through the USB port by connecting a flash memory drive containing an empty folder named Z100_LICENSE
Ethernet Connector	RJ-45 female connector

INSTALLATION INSTRUCTIONS

1. Fix the metal plate into a double back box by using the screws from the box, checking that it is levelled.
2. Connect the KNX bus, the Ethernet, the power supply and the inputs terminal to the back of the device.
3. Fit the device into its final position and check that the strength of the clips is enough to fix the device, it is recommended to push on most of the screen area. Check that the metal plate is completely hidden by the device.

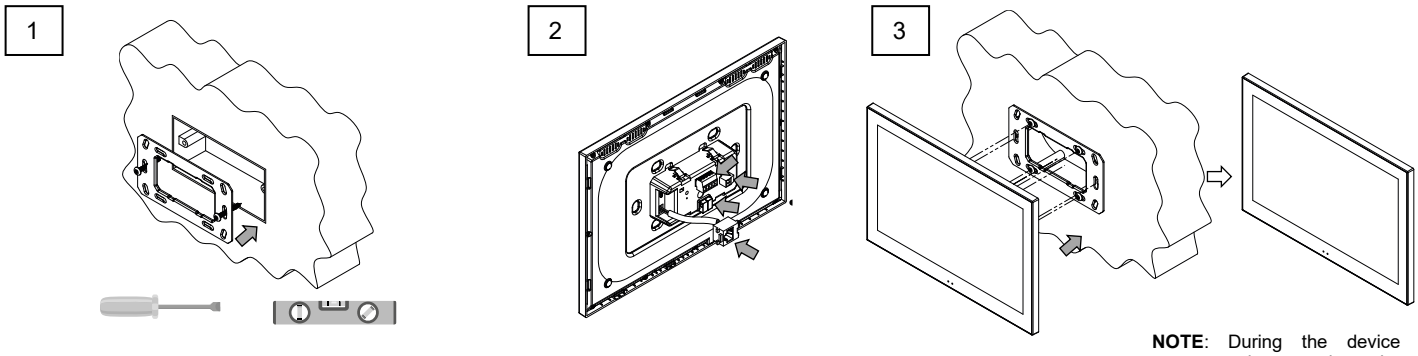

NOTE: During the device start-up, please select the option to *postpone* the acceptance of the EULA legal agreement, thus transferring it to the end user.

DIMENSIONS (mm)

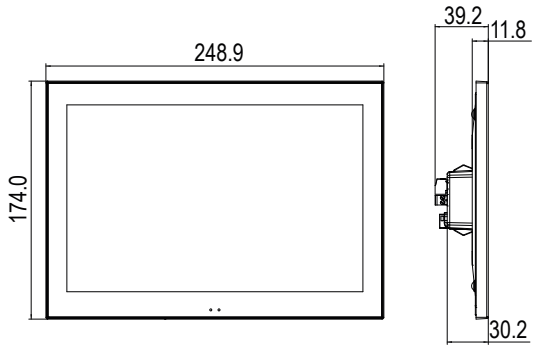

MAINTENANCE INSTRUCTIONS

- Do not use aerosol sprays, solvents, or abrasives that might damage the device.
- Clean the product with a clean, soft, damp cloth.

SAFETY INSTRUCTIONS AND ADDITIONAL NOTES

- Installation should only be performed by qualified professionals according to the laws and regulations applicable in each country.
- Do not connect the mains voltage nor any other external voltage to any point of the KNX bus; it would represent a risk for the entire KNX system. The facility must have enough insulation between the mains (or auxiliary) voltage and the KNX bus or the wires of other accessories, in case of being installed.
- Keep the device away from water (condensation over the device included) and do not cover it with clothes, paper or any other material while in use.
- The WEEE logo means that this device contains electronic parts and it must be properly disposed of by following the instructions at https://www.zennio.com/weee-regulation.
- This device contains software subject to specific licences. For details, please refer to https://zennio.com/licenses.